PART# TR-49SI/ TR-49BK

BLACK HORSE OFF ROAD

# INSTALLATION INSTRUCTIONS

## 49" SILVER CROSS BAR/49" BLACK CROSS BAR

## Before Installation

- Please read the instruction completely for easy installation, which will also help you to avoid scratches or other potential damages to your appealing car.
- The figures here are for reference only and may have differences with the actual product you received, however they share the same assembly way.

## Care and Cleaning

- Mild soap may be used also to clean the Product.
- Please periodically check and retighten all the hardware and clean the investment for a refresh look.

## Parts list

| NO. | QTY | NAME |
|---|---|---|
| ① | 2 | Cross Bar |
| ② | 4 | Foundation Of FCB Cross Bar |
| ③ | 4 | Plastic cover |
| ④ | 4 | Plastic gasket 2 |
| ⑤ | 2 | Key(Plastic) |
| ⑥ | 8 | Self tapping screw ST6*16 |
| ⑦ | 1 | Allen wrench S=5 |

**Step 1:** Try to attach cross bar brackets ② and find if they could match your car, If it doesn't, it is necessary to replace plastic gasket to No:2 ④:

As bellow picture 2, use Key ⑤ to release the cover; use ⑦ allen wrench S=5 to remove the bolt for the replacement of gasket and restore the cover back after that.

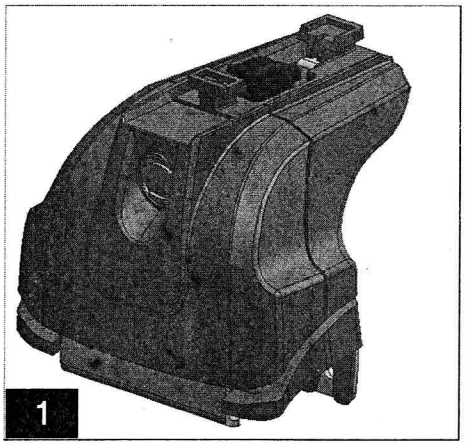


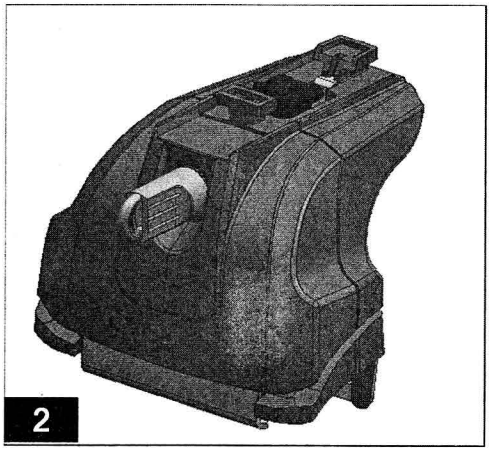


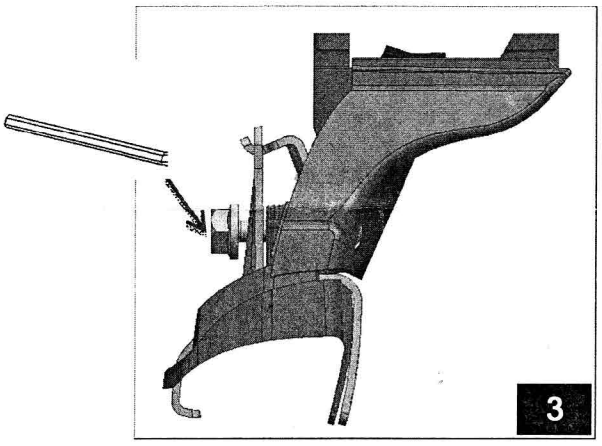


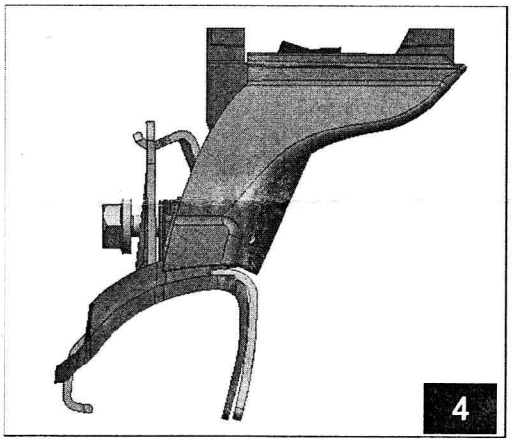


**Step 2:** As bellow picture, assemble brackets ② together with the cross bar ①;

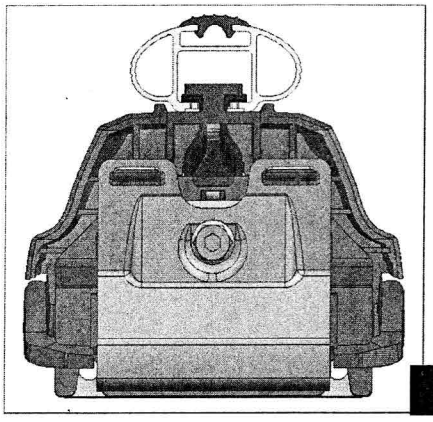

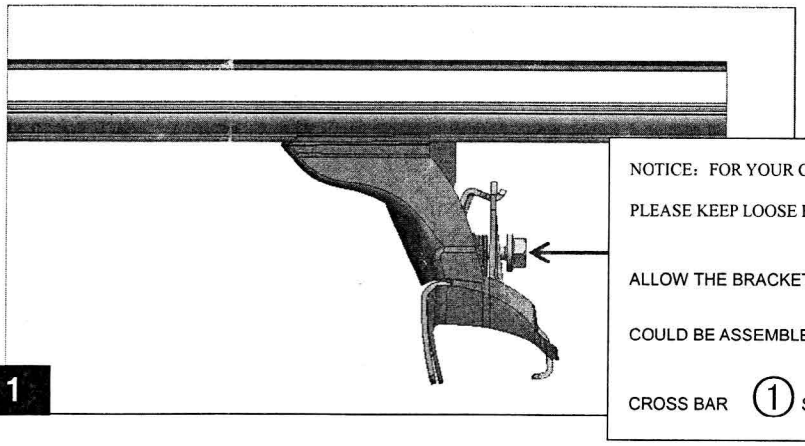


NOTICE: FOR YOUR COVENIENT PLEASE KEEP LOOSE FOR THE BOLTS: ALLOW THE BRACKETS ② COULD BE ASSEMBLED WITH THE CROSS BAR ① SMORTHLY.

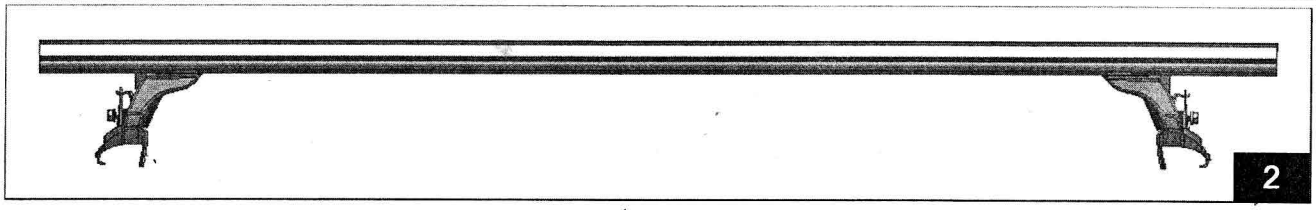


**Step 3:**

3-1、Adjust distance of two cross bar on the roof and place it to perfect position according to its size:

3-2、Using ⑦ allen wrench S=5 to fasten the bolts on the brackets for the cross bar fixing; find screwing hole from behind of the brackets and place a mark on it by using pen.

3-3、Release the bolts on the brackets and take off the cross bar; drilling hole with size Φ4.8 to 8 place on the roof which has been marked by pen.

3-4、Place the cross bar on the roof and adjust it to correct position according to the hole that we drilled; use ⑦ allen wrench S=5 to fasten those screws on the brackets and replace the plastic cover back with the key ⑤ ;

3-5、Place plastic cover ③ to both end of the cross bar and fasten the cross bar by using ⑥ self-tapping screw ST6*16 as bellow picture shown.

3-6、Please keep good preservation to the key ⑤ and ⑦ allen wrench S=5.

3-7、Installation completed

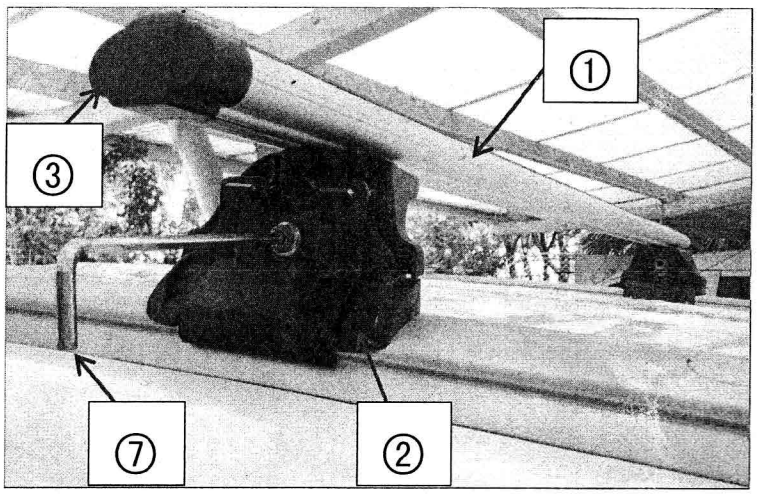


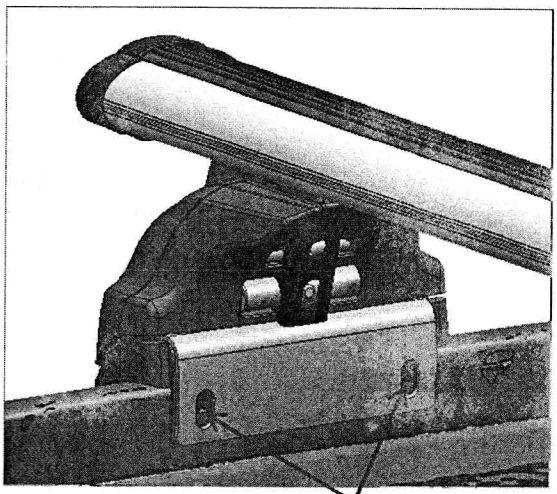

With mark of the position, drilling hole with size Φ4.8.

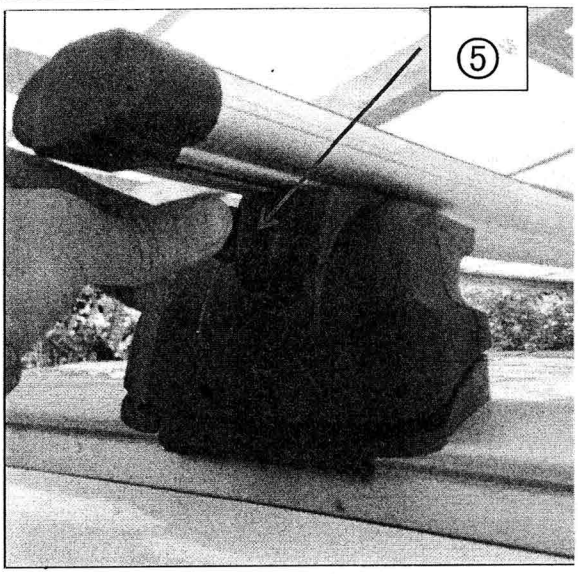


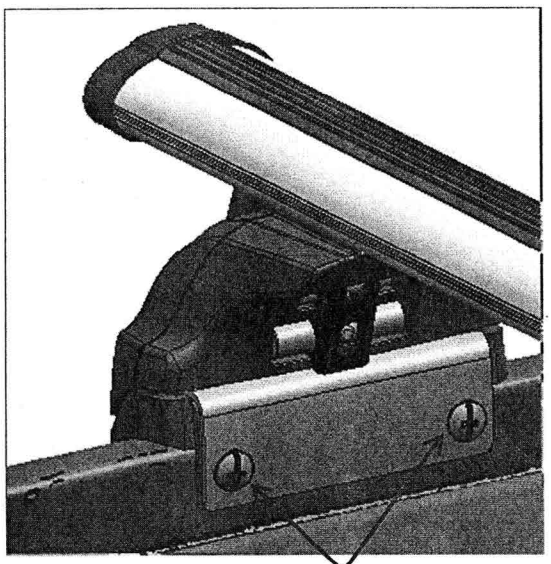

⑥ fasten the brackets with self-tapping screw, totally 8 places.

## NOTE

Any damages and losses caused by improper installation and application, goes beyond our quality warranty.