Product Name: **IWG75 (NO CLEVIS)**
Product Description: Internal Wastegate Actuator range with no clevis
Product Number: TS-06XX-XXXX

IMPORTANT NOTES ON YOUR IWG75 INTERNAL WASTEGATE ACTUATOR

- Consult your local specialist before setting your desired boost pressure, setting boost beyond your engines capability may result in engine damage.
- **Allow for adequate cool airflow around the top diaphragm housing.**

RECOMMENDATIONS

- Turbosmart recommends that boost pressure is set using a Dynamometer and not on public roads.
- Turbosmart recommends that the engines Air/Fuel ratio is checked while setting the desired boost pressure, as any increase in boost pressure can cause the engine to run "LEAN", resulting in possible engine damage.

MOUNTING YOUR IWG75 (non-clevis type)

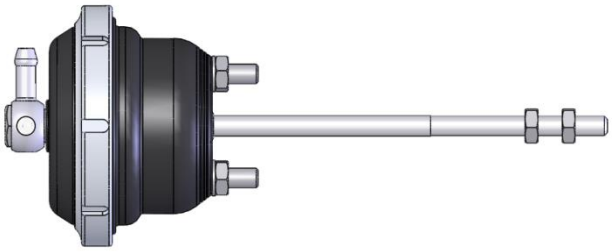

Example of non-clevis type IWG75

The mounting screws are 32mm apart, use the supplied M6 spring washers and nuts to secure the internal wastegate actuator onto the compressor cover of your turbocharger. The supplied internal wastegate actuator does **NOT** include a clevis as shown above. The rod is fastened to the wastegate flap by the two M6 nuts installed on the rod. The thread is M6x1.0.

Non-Clevis Type Actuator

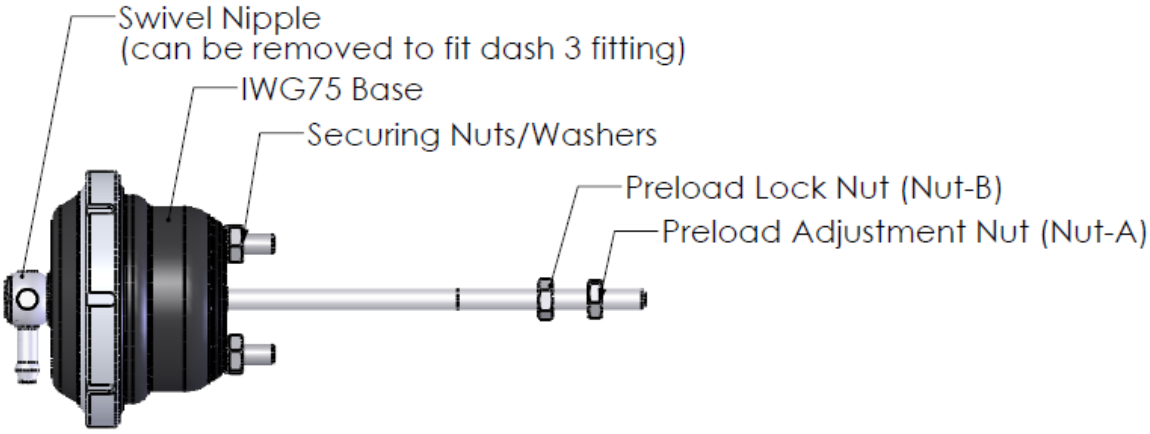

For a non-clevis type actuator, the preload is set by adjusting both of the M6 nuts together accordingly. The thread on the rod is M6x1.0 which means that one full turn of the nut equals 1mm change in rod extension, hence 1mm of preload. To set preload, hand-tighten the preload adjustment nut (nut A) clockwise to hold the wastegate flap shut. Now, use a 10mm spanner to turn nut-A two complete turns in a clockwise direction. The preload is now set to 2 mm. To lock the preload setting, tighten the preload lock nut (Nut-B) in an anticlockwise direction until it is hand-tight against the wastegate valve arm. Use a torque wrench to tighten both nuts to 6.5Nm (4.79 ft-lb).

Confirm that preload is set correctly by applying air pressure (do not apply air pressure supply higher than 3 bar (40psi) gauge) to the top cap of the IWG, the rod should move without hesitation once the air pressure applied to the cap of IWG is higher than the spring pressure.

ACHIEVING YOUR TARGET BOOST PRESSURE

There are various factors involved in achieving your target boost pressure including.

- The size of the spring fitted in your wastegate actuator i.e. the boost pressure achieved by the wastegate actuator spring only.
- The desired level of boost pressure and the difference between this and your wastegate spring pressure.
- The size of your turbocharger and wastegate and the resulting exhaust manifold backpressure in your system.

Turbosmart recommends the ideal setup for achieving your target boost pressure is to use the wastegate actuator in conjunction with a Turbosmart boost controller.

IMPORTANT NOTES ON SETTING THE WASTEGATE ACTUATOR SPRING PRESSURE

A stiffer spring should only be used when necessary. The wastegate actuator allows for different combinations of spring pressures. All springs that are adaptable with the wastegate actuator are shown in the table below. The tuner can use combinations of up to 3 springs to achieve the following base boost pressures. To aid in the identification of these springs they are supplied colour coded. If this colour coding is not clear please use the dimensions in the following table to identify the spring. Please see the following detailed instructions on setting your wastegate actuator spring pressure. The springs chosen should be rated to the lowest boost level desired.

Notes:

1. **As a rough guide it is possible to double the base pressure when accompanying a Turbosmart IWG75 with a Turbosmart boost controller if the system is adequately sized. Results will vary depending on every application.**
2. **Check the spring combination in your IWG75. If more springs are required, they can purchased from your Turbosmart dealer by using the TS-xxx-xxxx part numbers shown below each spring.**

Pressure rating			3 PSI Inner	5 PSI Inner	7 PSI Middle	11 PSI Middle	10 PSI Outer	7 PSI Outer
Part number			TS-0505-2001	TS-0505-2002	TS-0505-2003	TS-0505-2004	TS-0505-2005	TS-0505-2006
Colour			BRN/BLK	BRN/GRY	BRN/PUR	BRN/RED	BRN/BLU	BRN/PNK
Dimensions			29mm OD, 32mm Length	29mm OD, 36mm Length	36.5 OD, 43mm Length	36.5 OD, 52mm Length	44mm OD, 68mm Length	44mm OD, 57mm Length
Desired Boost Pressure								
PSI	BAR	KPa						
3	0.207	20.68	▲					
5	0.345	34.47		▲				
7	0.483	48.26			▲			
10	0.69	68.95					▲	
11	0.76	75.84				▲		
12	0.827	82.74		▲	▲			
13	0.89	89.6	▲				▲	
14	0.965	96.53			▲			▲
15	1.03	103.4		▲			▲	
16	1.1	110		▲		▲		
17	1.172	117.2			▲		▲	
19	1.31	131		▲	▲			▲
20	1.38	138	▲		▲		▲	
21	1.45	145				▲	▲	
22	1.517	151.7		▲	▲		▲	
23	1.59	159		▲		▲		▲
24	1.655	165.5	▲			▲	▲	
26	1.793	179.3		▲		▲	▲	

Changing the springs

WARNING! Fitting a wastegate actuator with a higher spring pressure may cause a higher than expected increase in boost pressure**.**

Turbosmart recommends adjusting your boost controller back to its minimum setting and measuring the new minimum boost pressure achieved by the new spring, before increasing your boost pressure again.

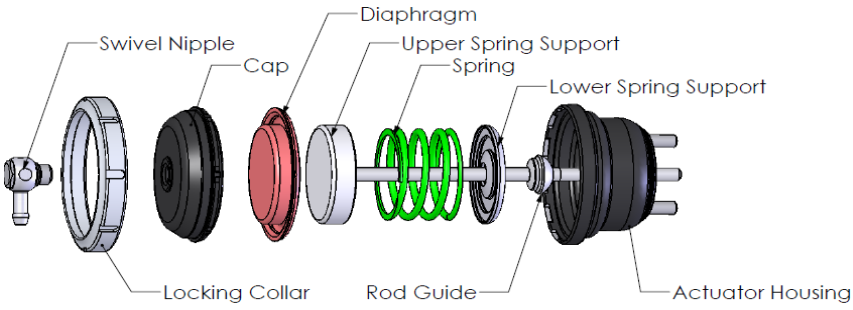

IMPORTANT: A press or clamping device must be used when removing or installing the collar as clamping the cap down removes the load off the collar from the spring and allows the collar to be removed.

1. If the engine has been running, allow it to cool down before removing the actuator from its bracket.
2. Use a press or a vice to clamp down the cap to the body and remove collar.
3. Remove the actuator from the clamping device carefully as the cap is under spring load.
4. Remove cap, diaphragm and upper spring support with rod.
5. Change the springs making sure that they sit in the right grooves in the lower spring support
6. Reassemble in reverse order. Ensure that the diaphragm is installed in the centre of the upper spring support and when installing the cap, make sure that the cap and diaphragm are centred and that the locating notches on the cap match the cut-outs in the lower housing.

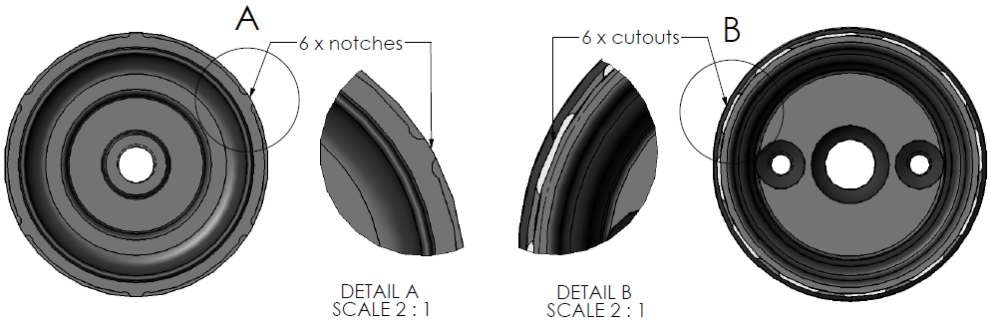

NOTES ON BOOST CONTROL HOOKUP

WARNING! Changing your connection method can cause a higher than expected increase in boost pressure. Turbosmart recommends adjusting your boost controller back to its minimum setting and measuring the new minimum boost pressure achieved by the new setup before increasing your boost again.

Basic setup

If no boost controller is being used connect the **BOOST PRESSURE ONLY SOURCE** to the wastegate actuator pressure nipple as shown.

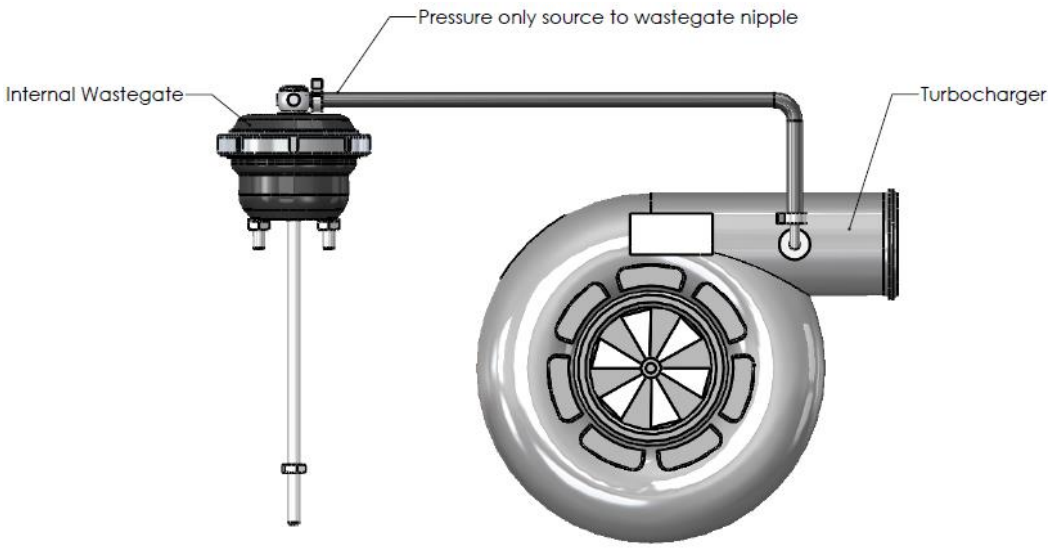

Note: Some vehicles are fitted with a “tee” type inlet port on the for the internal waste gate actuator. In such applications, when upgrading to a Turbosmart IWG75, use a hose tee-piece to supply a pressure signal to both the internal wastegate actuator and the factory 2 port boost solenoid.

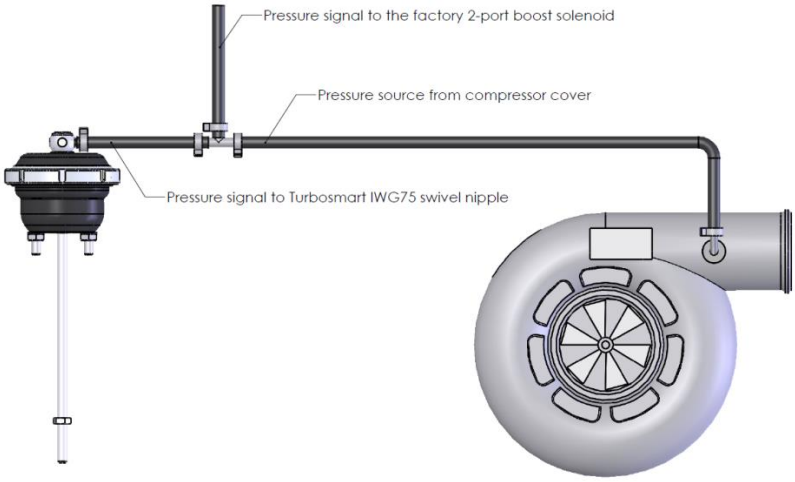

Boost Tee setup

When using your wastegate actuator in conjunction with a Turbosmart Boost Tee, fit the controller between the boost pressure source and pressure nipple as shown. Ensure the arrow on the Boost Tee is pointing in the direction illustrated.
Refer to the instructions supplied with your Boost Tee for further detail if necessary.

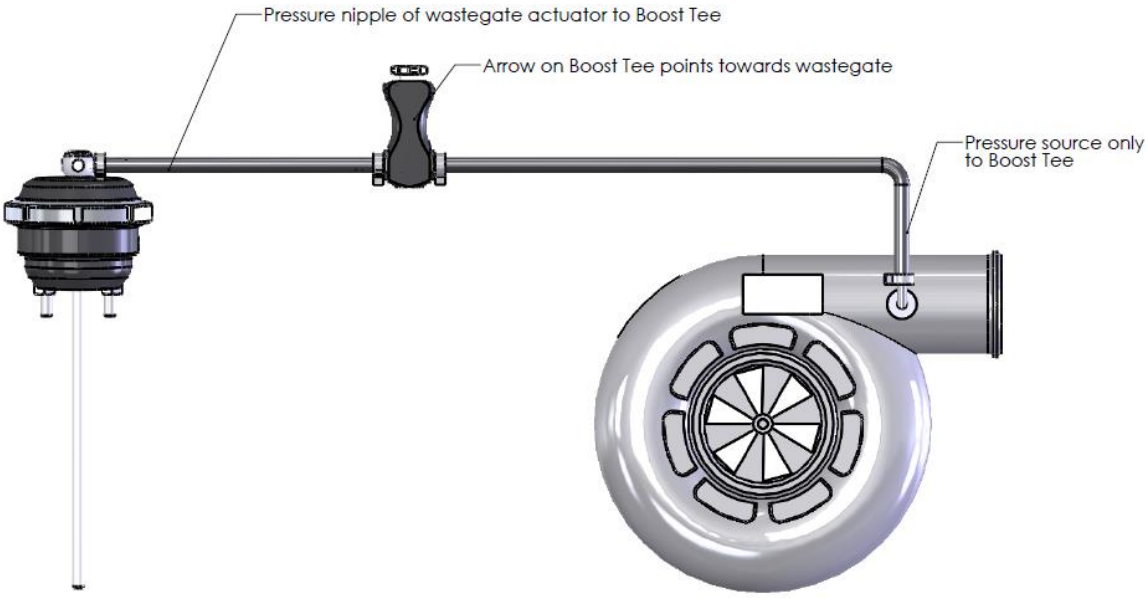

E-Boost connection methods

Turbosmart recommends using the wastegate actuator in conjunction with the Turbosmart E-Boost.

E-Boost connection Method

- Port 1 of solenoid vent to atmosphere
- Port 2 of solenoid to pressure nipple of wastegate actuator
- Port 3 of solenoid to **Pressure only source**

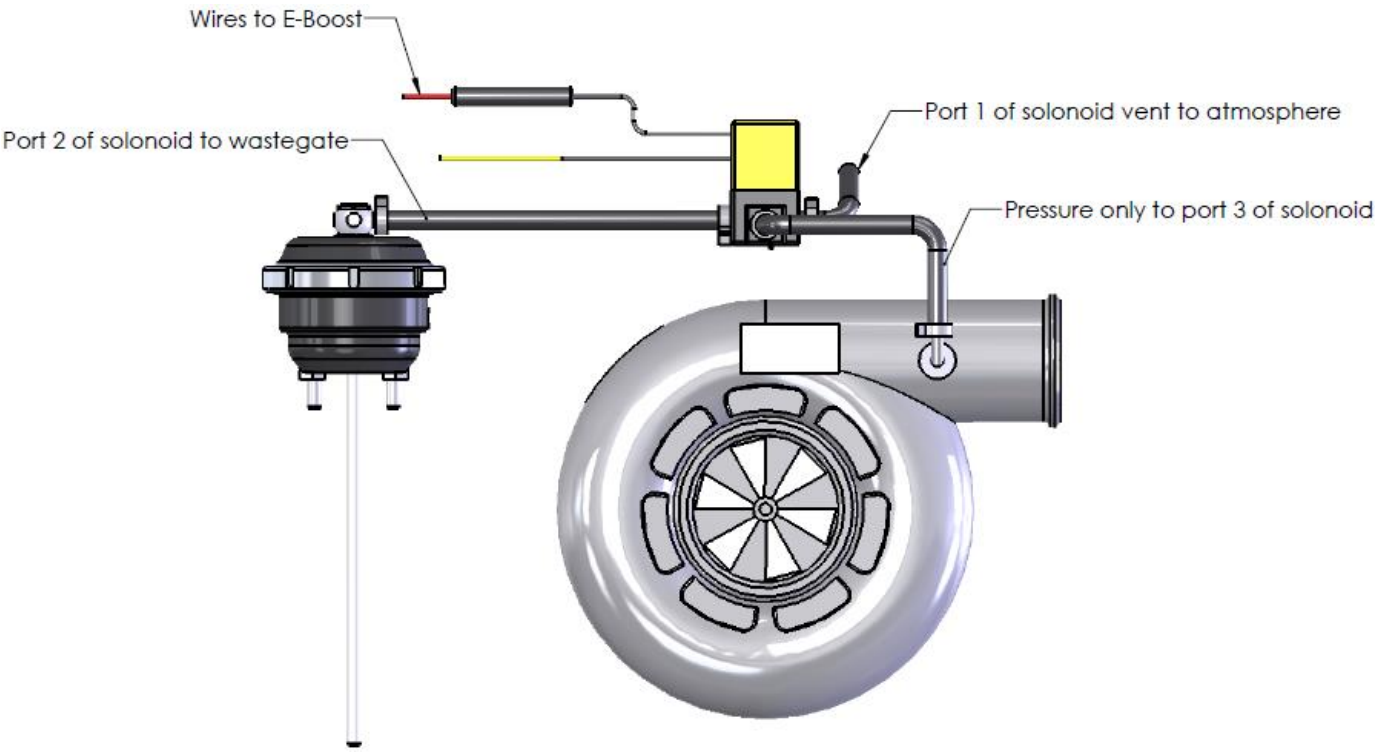

TURBOSMART
ONE YEAR LIMITED WARRANTY

Turbosmart is a company built on Customer Satisfaction and Service. That is why all of our products go through regimented test procedures before they are packaged and shipped. Turbosmart stands behind its products for one full year after purchase. Terms of Warranty, Service and Returns are as follows:

Limited Warranty: Turbosmart warrants its products to be free from defects in material and workmanship under normal use and if properly installed for a period of one year from date of purchase. If found to be defective, it will be replaced or repaired if returned prepaid along with proof of date of purchase. This shall constitute the sole remedy of the purchaser and the sole liability of Turbosmart to the extent permitted by law, the foregoing is exclusive and in lieu of all other warranties or representations whether expressed or implied, including any implied warranty of merchantability or fitness. In no event shall Turbosmart be liable for special or consequential damages. This warranty is only valid on products purchased from Turbosmart Authorized Dealers.

Service: After the warranty period has expired, repair service is charged based on a minimum and maximum charge rate. (Contact Customer Service for current rate).

Returns: When returning a Turbosmart product for repair, it must be accompanied by a completed Customer Warranty Form and RMA number. To access this form please go to our website www.turbosmartonline.com and you will find it on the Downloads page.

THE TURBOSMART PLEDGE

DO NOT USE ANY TURBOSMART PRODUCT UNTIL YOU HAVE CAREFULLY READ AND UNDERSTOOD THE FOLLOWING AGREEMENT. Please call if you have any questions or do not understand this agreement. Refer to our brochure, website or catalogue for terms and conditions and further information regarding your product. Turbosmart appreciates your business and pride ourselves on our customer service. We are always happy to offer you advice and will provide you with help in any way we can. The purpose of this agreement is to avoid any problems or hard feelings.

We sometimes make mistakes, as do our dealers, distributors and suppliers. Even customers can sometimes order the wrong parts. Do not use, modify, install, trial assemble, nick, drop, scratch or adjust any part until you first check for any damage. Damage must be reported immediately. NO EXCEPTIONS. If there are any components missing please contact your authorized reseller immediately upon receipt of your shipment. Missing components must be reported within five (5) business days of receipt. Parts returned for any reason MUST BE IN RESALABLE CONDITION. It is YOUR responsibility, “THE CUSTOMER” to carefully package any returns to avoid shipping damage. Insurance is highly recommended. Credit cannot be issued for damaged goods.

Turbosmart warranties the quality of the products it designs and manufactures to be free of defects in material and workmanship. This limited warranty is extended only to the original purchaser and may not be transferred or assigned. This limited warranty applies to any product, which after careful inspection by Turbosmart, after receipt of the product from our authorized reseller, is found to have a defect in either material or workmanship. Any modifications to the product will void any and all warranties and will not be exchanged. Before installation, check new car warranty. Turbosmart is not responsible for voiding any original manufactures warranty.

All warranty claims must be returned to the nearest Turbosmart Office, you must return the product and sales receipt, at your own expense, accompanied by the Customer Warranty Form stating the reason for the claim. Proof of purchase must be provided with any warranty claim and will be verified with the authorized reseller from which the product was purchased.

If all the above procedures are followed, and the product is found to be defective in either workmanship or material, Turbosmart shall either repair or replace the product, at its sole discretion, and sole cost. This limited warranty does not cover or apply to any personal injury, labor charges or any other incidental costs or damages caused by the defective product. The individual purchaser acknowledges and agrees that the disclaimer of any liability for personal injury is a material term for this agreement and the individual purchaser agrees to indemnify Turbosmart and to hold Turbosmart harmless for any claim related to the item of the equipment purchased. Under no circumstances will Turbosmart be liable for any damages or expenses by reason of use or sale of any such equipment.

THIS LIMITED WARRANTY IS THE ONLY EXPRESS WARRANTY, WHICH APPLIES TO TURBOSMART PRODUCT AS EXPRESSLY GIVEN IN LIEU OF ANY OTHER WARRANTY EXPRESSED OR IMPLIED, INCLUDING THAT OF MERCHANTABILITY. ANY IMPLIED WARRANTY INCLUDING THAT OF MERCHANTABILITY AND/OR FITNESS FOR A PARTICCULAR PURPOSE IS HEREBY LIMITED BY THE SAME TERMS AND TIME LIMITATIONS SET FORTH IN THIS LIMITED EXPRESS WARRANTY AND OTHERWISE EXCLUDED. EXCEPT FOR THOSE OBLIGATIONS ASSUMED HEREIN, TURBOSMART ASSUMES NO OTHER OBLIGATIONS IN CONNECTION WITH THE SALE OF ITS PRODUCTS.
IN THE EVENT THAT THE INDIVIUDAL PURCHASER DOES NOT AGREE WITH THIS AGREEMENT THE BUYER MAY PROMPTLY RETURN THIS PRODUCT, IN A NEW AND UN-USED CONDITION, WITH A DATED PROOF OF PURCHASE, TO THE PLACE OF PURCHASE WITHIN SEVEN (7) DAYS FROM THE DATE OF PURCHASE FOR A FULL REFUND. THE INSTALLATION OF THIS PRODUCT INDICATES THAT THE INDIVIDUAL PURCHASER HAS READ AND UNDERSTOOD THIS AGREEMENT AND ACCEPTS ITS TERMS AND CONDITIONS.

Happy motoring!
The Turbosmart Team.